Moment

landscapeforms

Specification Sheet | DZ 100/200

The streamlined profile of the Moment collection exemplifies a masterful blend of design purity and functional adaptability. Its minimalist aesthetic, focused on essential geometric forms, achieves a harmonious balance from base to luminaire. Seamless transitions between elements further enhance the design. Fasteners linking base to pole, pole to arm, and arm to luminaire are concealed within the housing, enhancing its sleek modernity.

Moment area light merges sleek minimalism with enhanced performance. Luminaires can tilt up to 50 degrees and lock in 10-degree increments with a range of available pole heights, making it suitable for a wide variety of applications. Options include a selection of roadway and accent distribution types, up to 10,000lm delivered, a deep-set light engine, and an optional hexcell louvre that ensure precise illumination with minimal glare.

Housing & Materials

Cast Aluminum and cast Stainless Steel construction. Factory sealed and replaceable light engine cartridge with UV stable, impact modified clear or diffused acrylic lens. With a 'fastener free' look, all hardware is magni-coated for optimum corrosion and 'anti-seize' protection. Assembly is IP66 rated.

Electrical

Surge protected 120V - 277V 50/60Hz electronic driver located internal to luminaire arm, 0-10V dimmable. Optional pole mounted ANSI C136.41 twist lock receptacle and GFCI outlet (with 'in-use' cover) are available.

Light Engine

Moment features a replaceable LED cartridge with die-cast aluminum heatsink, high power LEDs on a RoHS compliant circuit board with secondary optics in either Roadway or Accent distribution types. Accent distributions feature a 3" recessed depth, and optional hexcell louvre. All cofigurations are available in 2700K, 3000K, and 4000K. >80CRI across all available color temperatures. Luminiares meet or exceed TM21 L70: >60,000 hrs.

Distributions

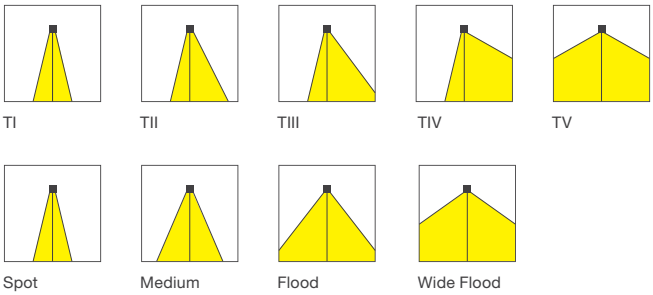

Warranty

Luminaires are warranted for six years.

Certification

UL Listed for Wet Location, International Dark Sky Approved, Buy America Compliant, RoHS Compliant, cUL

Designed by Yonoh Creative Studio

Click here for patent information related to this product.

Moment

landscapeforms

Specification Sheet | DZ 100/200

Specification

Luminaire #1 _____

Luminaire #2 _____
If applicable
Luminaire #3 _____
If applicable
Pole _____
May include arms, base covers, GFCI, NEMA7 socket, etc.

Luminaire and Mounting Configurations – Roadway/Area Optic – 100 Series

Product	LED Configuration	Drive Current	Color Temp	Distribution	Lens	Powdercoat
DZ101 *(Single Luminaire)* **DZ102** *(2 Luminaires - back to back)*	**30** *(30 LED)* **50** *(50 LED)*	**SO** *(Standard Output)* **HO** *(High Output)*	**27K** *(2700K)* **30K** *(3000K)* **40K** *(4000K)*	**T1** *(Type I)* **T2** *(Type II)* **T3** *(Type III)* **T4** *(Type IV)* **T5** *(Type V)*	**CLR** *(Clear)* **FRS** *(Frosted)*	**See powdercoat color options on the Material / Colors Sheet.**

Example: DZ102 – 50 – HO – 30K – TIII – CLR – MBK

Luminaire and Mounting Configurations – Accent Optic – 200 Series

Product	LED Configuration	Drive Current	Color Temp	Distribution	Louvre	Lens	Powdercoat
DZ201 *(Single Luminaire)* **DZ202** *(2 Luminaires - back to back)*	**30** *(30 LED)* **50** *(50 LED)*	**SO** *(Standard Output)* **HO** *(High Output)*	**27K** *(2700K)* **30K** *(3000K)* **40K** *(4000K)*	**SP** *(Spot (20°)* **ME** *(Medium (25°)* **FL** *(Flood (45°)* **WF** *(Wide Flood (75°)*	**LV1** *(Louvre-With)* **NLV** *(Louvre-Without)*	**CLR** *(Clear)* **FRS** *(Frosted)*	**See powdercoat color options on the Material / Colors Sheet.**

Example: DZ202 – 50 – HO – 30K – ME – LV1 – CLR – MBK

Moment

landscapeforms

Specification Sheet | DZ 100/200

Pole and Luminaire Configuration

Product	Lens height and mounting configuration	Base Cover Option	Twist Lock Receptacle	GFCI with 'in use' cover	Photo / Motion Sensor	Powdercoat
DZP *(Pole)*	**12-A** *(Single 12')* **14-A** *(Single 14')* **16-A** *(Single 16')* **20-A** *(Single 20')* **25-A** *(Single 25')* **12-B** *(Back to back 12')* **14-B** *(Back to back 14')* **16-B** *(Back to back 16')* **20-B** *(Bback to back 20')* **25-B** *(Back to back 25')* **16-C** *(Staggered 16')* **20-C** *(Staggered 20')* **25-C** *(Staggered 25')* **25-D** *(Spiral 25')*	**BC** *(Base Cover)* **NUT** *(Nut Covers)*	**NTW** *(No Twist Lock)* **TW1** *(With Twist Lock)*	**R** *(With Power Receptacle)* **NR** *(Without Power Receptacle)*	**MS1** *(With Motion Sensor)* **NMS** *(No Motion Sensor)*	**See powdercoat color options on the Material / Colors Sheet.**

Example: DZP – 12-A – BC – TW1 – R – MS1 – MBK

Pole Modifications

Part Number	Modification	Description
CAM	Camera	
SPE	Speaker	
WAP	WiFi Access Point	
BAN	Banner Arms	
VIB	Vibration Dampener	
CPH	Custom Pole Height	
CLH	Custom Lens Height	
CPC	Custom Powdercoat Color	
--	Other	

Modifications listed are the most common changes/additions requested. If your requirements aren't shown here, select 'other' and write in the modification needed. Please provide as much detail as possible to streamline the quoting process. All modifications to standard products will require evaluation and quoting approved by Landscape Forms prior to order placement.

Moment

landscapeforms

Specification Sheet | DZ 100/200

Lens Height and Pole Configuration Selection Guide

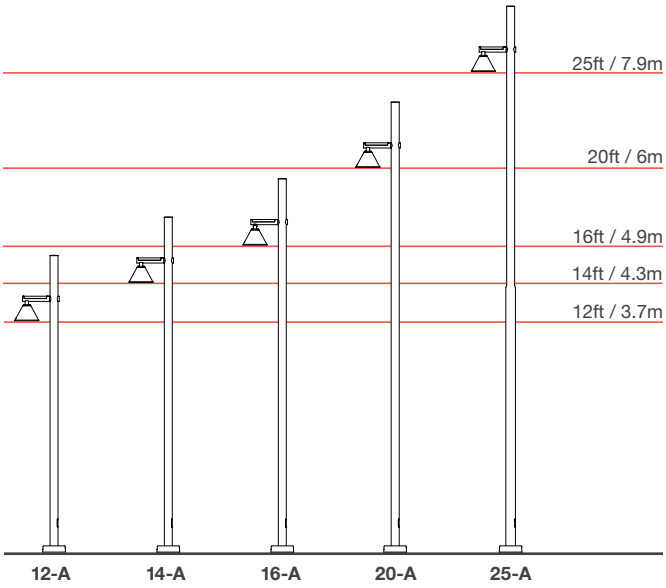

Compatible Luminaries

	100 Series	200 Series
Single	DZ101	DZ201

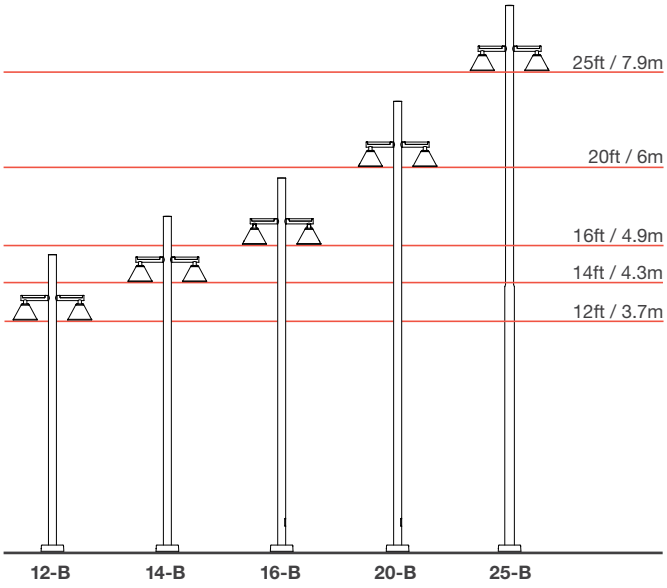

Compatible Luminaries

	100 Series	200 Series
Single	DZ102	DZ202

Moment

landscapeforms

Specification Sheet | DZ 100/200

Lens Height and Pole Configuration Selection Guide

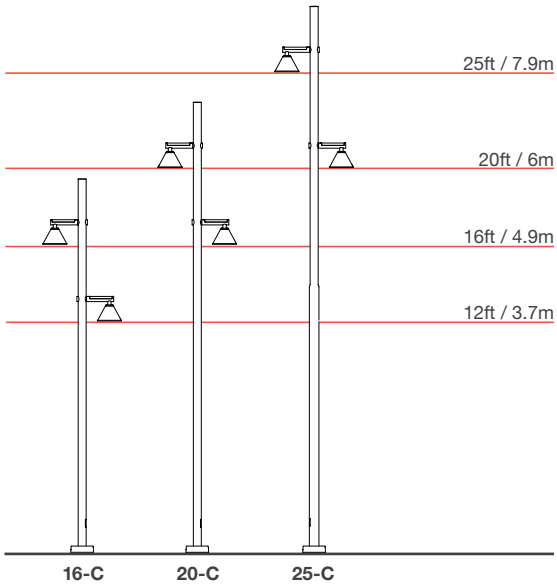

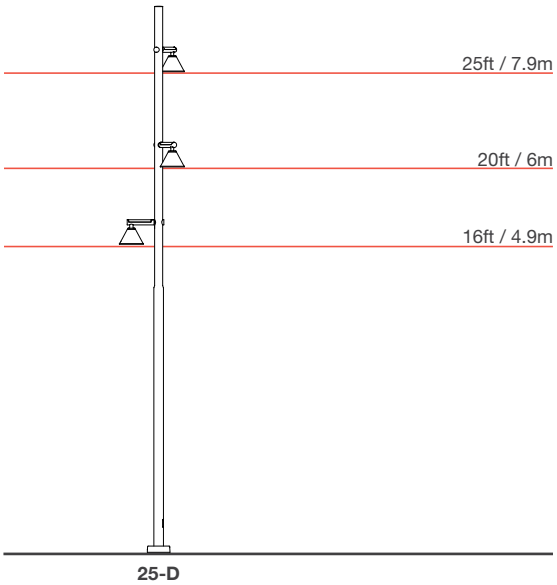

Compatible Luminaries

	100 Series	200 Series
Single	DZ101	DZ201

	100 Series	200 Series
Single	DZ101	DZ201

Pole & Base Cover

Poles are manufactured from seamless aluminum alloy with a flush mounted hand hole cover. Base plate is cast aluminum and includes either a two-piece cast aluminum decorative base cover, or four cast aluminum nut covers. Mounting template and anchor hardware included. Anchor bolts conform to ASTM F1554 Grade 55 and are provided with two hex nuts and two flat washers. Bolts have an “L” bend on one end and are galvanized a minimum of 12” on the threaded end. Poles are pre-drilled to suit the specified mounting conditions prior to powdercoating, and include flush top pole cap, configured to support installation of ANSI C136.41 twist-lock receptacle when specified. configured to support installation of ANSI C136.41 twist-lock receptacle when specified.

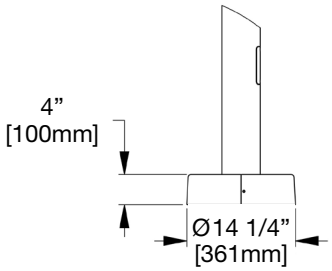

Mounting

Cast stainless steel mounting brackets attach to a pre-drilled 5” diameter section of pole via a through-bolt arrangement. Single luminaire or back to back arrangement. Luminare arm attaches to bracket via 4 bolts internal to the driver housing/arm. All hardware made from stainless steel.

Moment

landscapeforms

Specification Sheet | DZ 100/200

Wind Load Chart

Part Number	Description	Wall Thick-ness (in)	# of Lumi-naires	Total Weight of Lumi-naire(s) (lbs)	Total Lumi-naire(s) EPA (ft2)	Max EPA at 90 MPH (ft2)	Max EPA at 100 EPA (ft2)	Max EPA at 110 MPH (ft2)	Max EPA at 120 MPH (ft2)	Max EPA at 130 MPH (ft2)	Max Wind Speed		
											Max Wind Speed (MPH)	Base Overturn-ing Moment (ft-lbf)	Base Shear (lbf)
DZP-12-A*	5"x12ft pole, single luminaire	0.188	1	31.75	0.568	4.2	3	2.3	1.8	1.4	130	2390	260
DZP-12-B*	5"x12ft pole, back to back luminaires	0.188	2	62.02	1.111	4.9	3.6	2.8	2.1	1.7	130	2560	280
DZP-14-A	5"x14ft pole, single luminaire	0.188	1	31.75	0.568	2.7	1.8	1.2	.09	.06	130	2520	260
DZP-14-B*	5"x14ft pole, back to back luminaires	0.188	2	62.02	1.111	3.0	2.0	1.4	–	–	110	2610	260
DZP-16-A	5"x16ft pole, single luminaire	0.188	1	31.75	0.568	6.3	4.7	3.6	2.9	2.3	193	4630	413
DZP-16-B	5"x16ft pole, back to back luminaires	0.188	2	62.02	1.111	6.3	4.7	3.6	2.9	2.3	161	4556	381
DZP-16-C	5"x16ft pole, staggered height luminaires	0.188	2	63.50	1.135	6.3	4.7	3.6	2.9	2.3	172	4607	405
DZP-20-A	5"x20ft pole, single luminaire	0.188	1	31.75	0.568	3.3	2.1	1.5	1	0.7	137	4577	354
DZP-20-B	5"x20ft pole, back to back luminaires	0.188	2	62.02	1.111	3.3	2.1	1.5	1	0.7	117	4529	335
DZP-25-A	6" to 5" 25ft step pole, single luminaire	0.188	1	31.75	0.568	4.2	3.1	2.3	1.7	1.3	158	6633	432
DZP-25-B	6" to 5" 25ft pole pole, back to back luminaires	0.188	2	62.02	1.111	4.2	3.1	2.3	1.7	1.3	135	6550	404
DZP-25-C	6in dia to 5in dia x 25ft pole, staggered height luminaires	0.188	2	63.50	1.135	4.2	3.1	2.3	1.7	1.3	143	6572	423
DZP-25-D	6" to 5" 25ft step pole, 3-luminaire spiral	0.188	3	95.25	1.703	4.2	3.1	2.3	1.7	1.3	133	6597	424

Generic weight adder for max EPA calcs: 50lbs

* *For applications requiring high EPA ratings, contact the factory for available options.*

Moment

landscapeforms

Specification Sheet | DZ 100/200

100 Series Luminaire Dimensions, Weights and EPA's

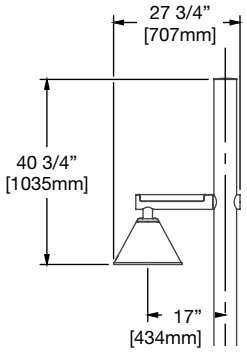

DZ101
Weight: 28.5lbs
EPA: 0.5675ft^2

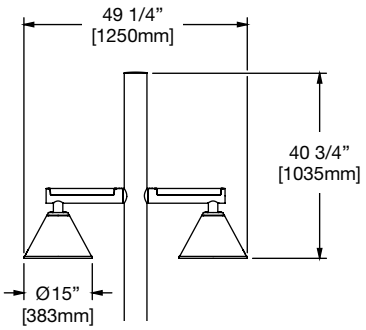

DZ102
Weight: 52.1 lbs
EPA: 1.1107ft^2

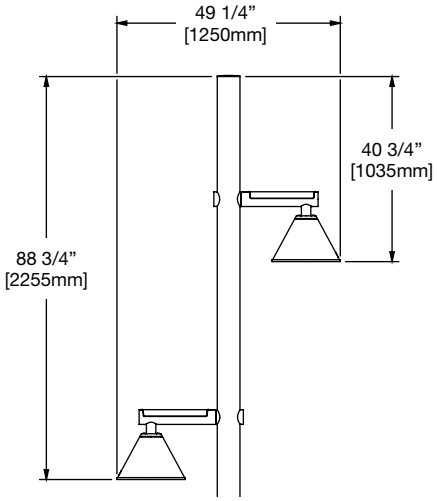

DZ101
Weight: 57lbs
EPA: 1.135ft^2

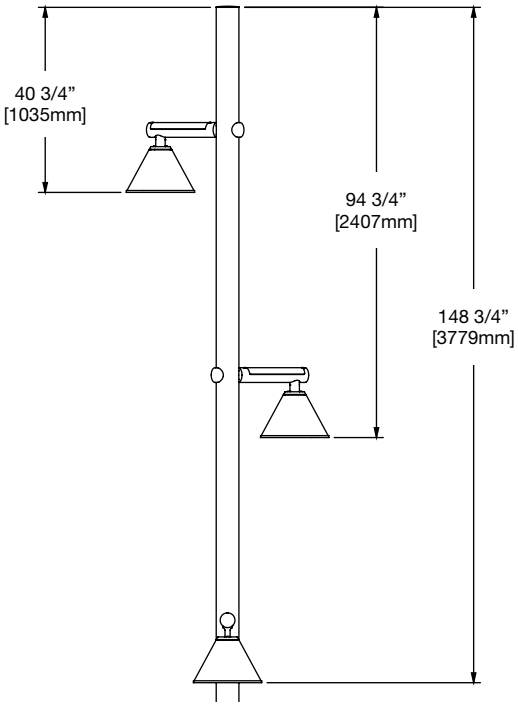

DZ101
Weight: 85.5lbs
EPA: 1.7025ft^2

Moment

landscapeforms

Specification Sheet | DZ 100/200

200 Series Luminaire Dimensions, Weights and EPA's

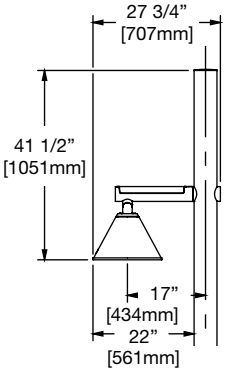

DZ201
Weight without Louvre: 30lbs
Weight with Louvre: 31.75lbs
EPA: 0.5675ft^2

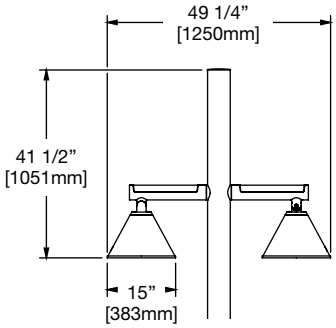

DZ202
Weight without Louvre: 58.62lbs
Weight with Louvre: 62.02lbs
EPA: 1.1107ft^2

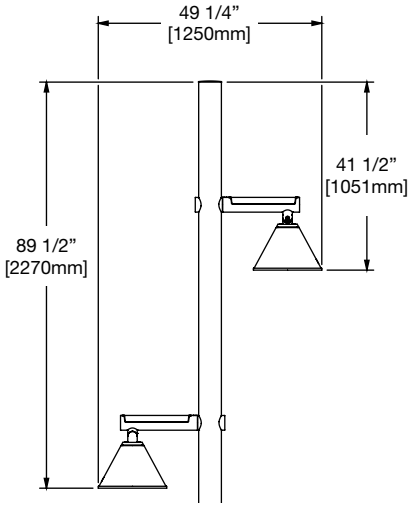

DZ201
Weight without Louvre: 60lbs
Weight with Louvre: 63.5lbs
EPA: 1.135ft^2

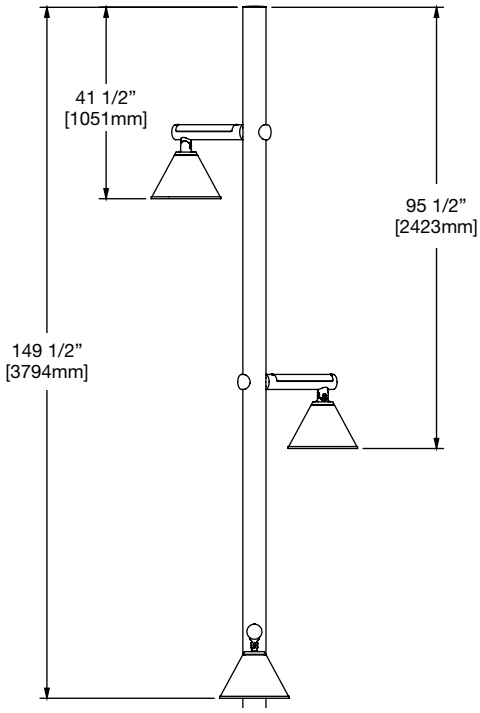

DZ201
Weight without Louvre: 90lbs
Weight with Louvre: 95.25lbs
EPA: 1.7025ft^2

Moment

landscapeforms

Specification Sheet | DZ 100/200

Luminaire & Pole Accessories

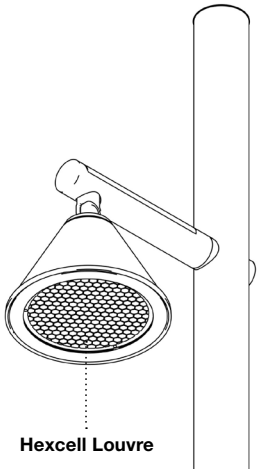

Hexcell Louvre

For use with accent optics only.

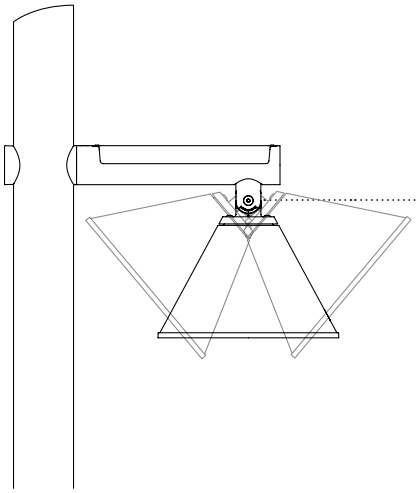

Tilt adjustable luminaire for accent lighting

Up to 50° tilt in 10° increments.

GFCI Outlet with In-use Cover

Placement approx 3' above grade and 180° from handhole.

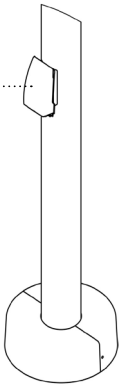

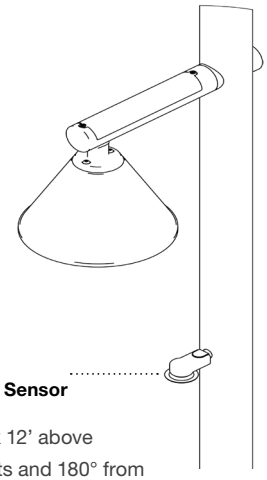

Single Luminaire PIR Photo/motion Sensor

Placement approx 12' above grade on all heights and 180° from handhole, except 10' above grade on the 12' lens height version.

Twist Lock Location

Moment

landscapeforms

Specification Sheet | DZ 100/200

Luminaire Performance Data – Roadway/Area Optic 100 Series

LED Quantity	Drive Current	Lens	Distribution Type	Lumen Output	Efficacy	Input Power (W)	BUG Rating
30	SO	Clear	T1	2553	128	20	B1-U0-G1
			T2	2550	128	20	B1-U0-G1
			T3	2406	120	20	B1-U0-G1
			T4	2275	114	20	B1-U0-G1
			T5	2493	125	20	B1-U0-G0
		Frosted	T1	2291	115	20	B1-U0-G1
			T2	2288	114	20	B1-U0-G1
			T3	2169	108	20	B1-U0-G1
			T4	2005	100	20	B1-U0-G1
			T5	2210	111	20	B1-U0-G1
	HO	Clear	T1	5121	116	44	B2-U0-G2
			T2	5116	116	44	B1-U0-G1
			T3	4827	110	44	B1-U0-G1
			T4	4565	104	44	B2-U0-G2
			T5	5002	114	44	B2-U0-G1
		Frosted	T1	4605	105	44	B2-U0-G1
			T2	4599	105	44	B1-U0-G1
			T3	4352	99	44	B1-U0-G1
			T4	4029	92	44	B1-U0-G1
			T5	4442	101	44	B2-U0-G1
50	SO	Clear	T1	7501	123	61	B2-U0-G2
			T2	7493	123	61	B2-U0-G2
			T3	7071	116	61	B2-U0-G2
			T4	6686	110	61	B2-U0-G2
			T5	7326	120	61	B3-U0-G1
		Frosted	T1	6734	110	61	B2-U0-G2
			T2	6724	110	61	B2-U0-G1
			T3	6364	104	61	B1-U0-G1
			T4	5892	97	61	B2-U0-G1
			T5	6494	106	61	B2-U0-G1
	HO	Clear	T1	9747	117	83	B3-U0-G3
			T2	9737	117	83	B2-U0-G2
			T3	9188	111	83	B2-U0-G2
			T4	8688	105	83	B2-U0-G2
			T5	9520	115	83	B3-U0-G1
		Frosted	T1	8751	105	83	B3-U0-G2
			T2	8738	105	83	B2-U0-G2
			T3	8270	100	83	B2-U0-G1
			T4	7656	92	83	B2-U0-G1
			T5	8439	102	83	B3-U0-G1

Lumen output scaling factors: 2700K (0.947), 3500K (1.046), 4000K (1.053)

Moment

landscapeforms

Specification Sheet | DZ 100/200

Luminaire Performance Data – Accent Optic 200 Series

LED Quantity	Drive Current	Lens	Beam Angle	Lumen Output	Efficacy	Input Power (W)	Peak Intensity (cd)
30	SO	Clear	SP	2477	118	21	13001
			SP+LV1	1352	64	21	10845
			ME	2351	112	21	8755
			FL	2349	112	21	4599
			WF	2473	118	21	1598
		Frosted	SP	2429	116	21	8765
			ME	2297	109	21	6194
			FL	2316	110	21	4090
			WF	2268	108	21	1521
	HO	Clear	SP	4953	113	44	26001
			SP+LV1	2703	61	44	21690
			ME	4701	107	44	17510
			FL	4697	107	44	9225
			WF	4945	112	44	3196
		Frosted	SP	4861	110	44	17563
			ME	4596	104	44	12411
			FL	4629	105	44	8179
			WF	4539	103	44	3047
50	SO	Clear	SP	7095	114	62	37285
			SP+LV1	3872	62	62	31102
			ME	6734	109	62	25109
			FL	6729	109	62	13645
			WF	7084	114	62	4583
		Frosted	SP	6957	112	62	25139
			ME	6579	106	62	17763
			FL	6626	107	62	12003
			WF	6496	105	62	4361
	HO	Clear	SP	9338	113	83	49059
			SP+LV1	5096	61	83	40924
			ME	8863	107	83	33038
			FL	8856	107	83	17730
			WF	9324	112	83	6030
		Frosted	SP	9157	110	83	33077
			ME	8659	104	83	23373
			FL	8721	105	83	15794
			WF	8550	103	83	5738

Lumen output scaling factors: 2700K (0.947), 3500K (1.046), 4000K (1.053)

Moment

landscapeforms

Specification Sheet | DZ 100/200

100 Series - 30 LED SO CLR lens at 12’

Performance light engine @ 3000K

1.0fc 0.5fc 0.2fc

12’ Lens Height, Type I

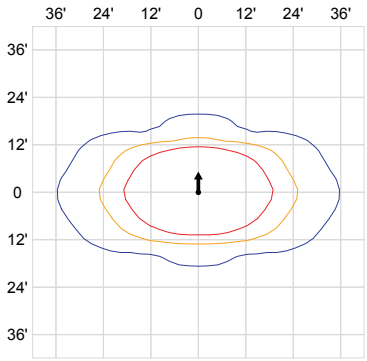

12’ Lens Height, Type II

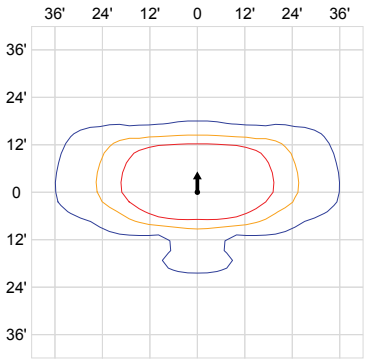

12’ Lens Height, Type III

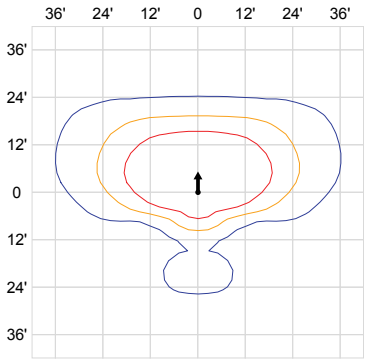

12’ Lens Height, Type IV

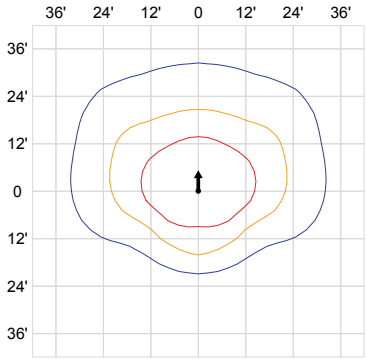

12’ Lens Height, Type V

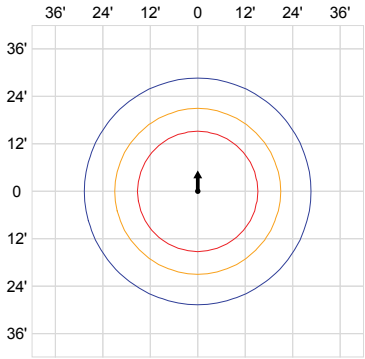

Moment

landscapeforms

Specification Sheet | DZ 100/200

100 Series - 30 LED HO CLR lens at 14’

Performance light engine @ 3000K

1.0fc 0.5fc 0.2fc

14’ Lens Height, Type I

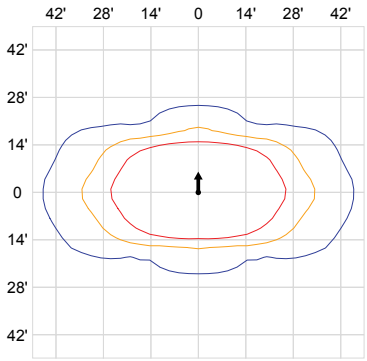

14’ Lens Height, Type II

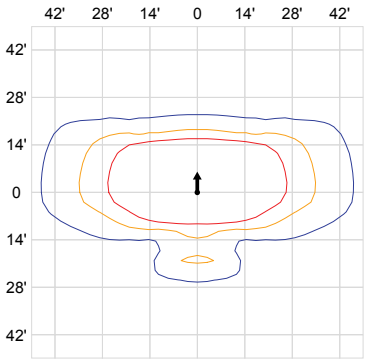

14’ Lens Height, Type III

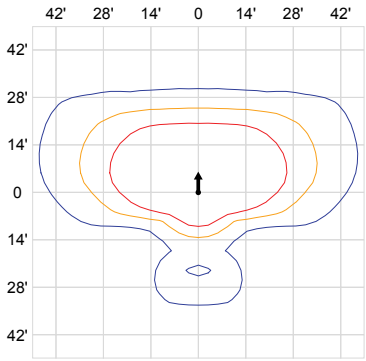

14’ Lens Height, Type IV

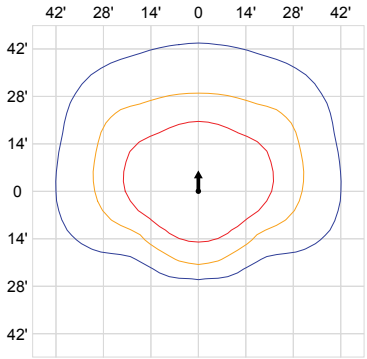

14’ Lens Height, Type V

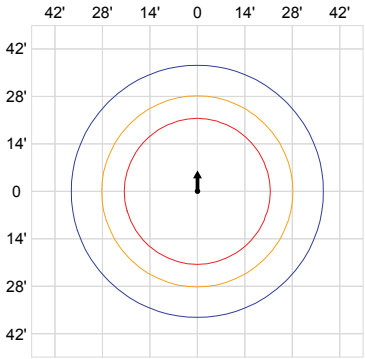

Moment

landscapeforms

Specification Sheet | DZ 100/200

100 Series - 50 LED SO CLR lens at 16’

Performance light engine @ 3000K

1.0fc 0.5fc 0.2fc

16’ Lens Height, Type I

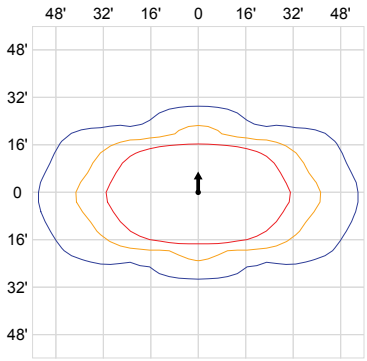

16’ Lens Height, Type II

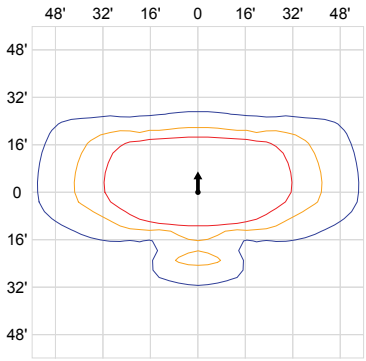

16’ Lens Height, Type III

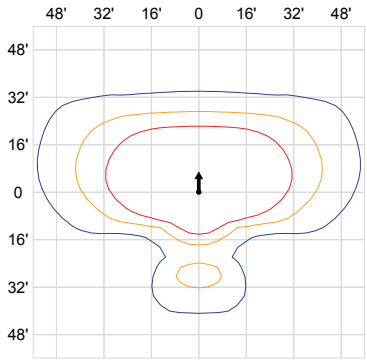

16’ Lens Height, Type IV

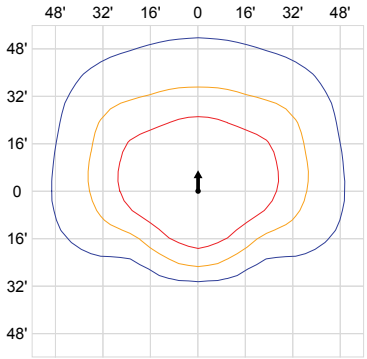

16’ Lens Height, Type V

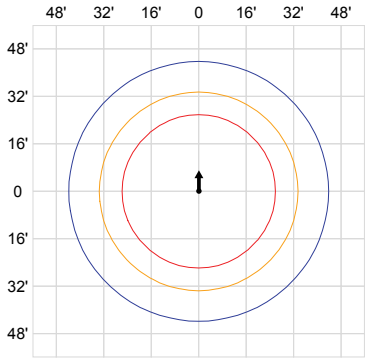

Moment

landscapeforms

Specification Sheet | DZ 100/200

100 Series - 50 LED HO CLR lens at 20’

Performance light engine @ 3000K

1.0fc 0.5fc 0.2fc

20’ Lens Height, Type I

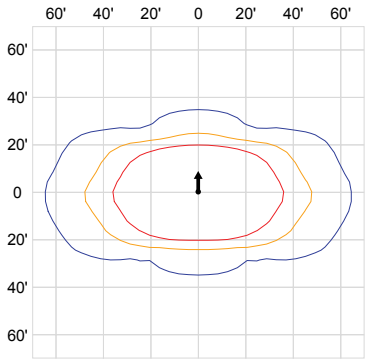

20’ Lens Height, Type II

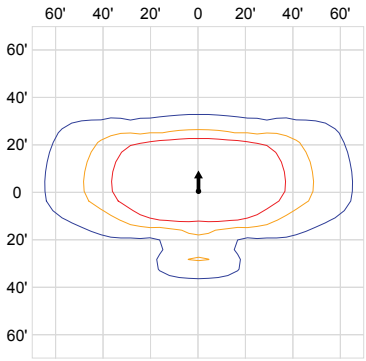

20’ Lens Height, Type III

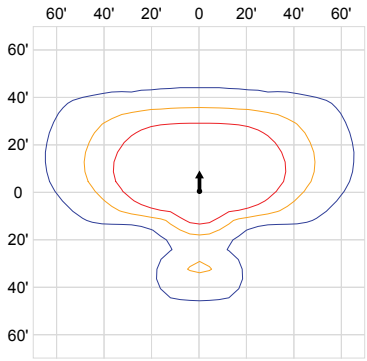

20’ Lens Height, Type IV

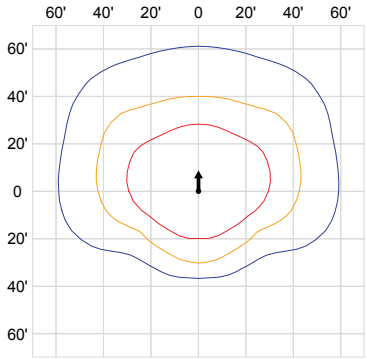

20’ Lens Height, Type V

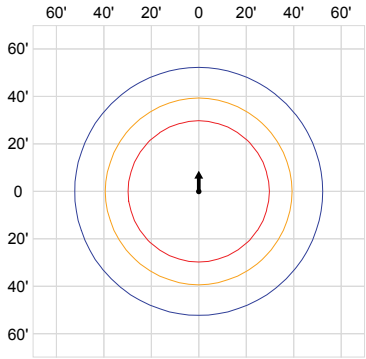

Moment

landscapeforms

Specification Sheet | DZ 100/200

100 Series - 50 LED HO CLR lens at 25’

Performance light engine @ 3000K

1.0fc 0.5fc 0.2fc

25’ Lens Height, Type I

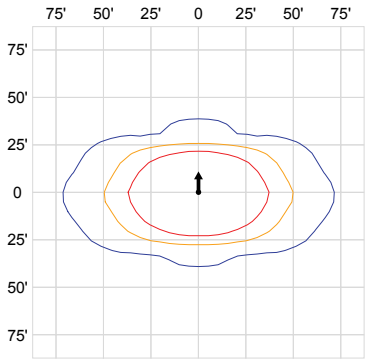

25’ Lens Height, Type II

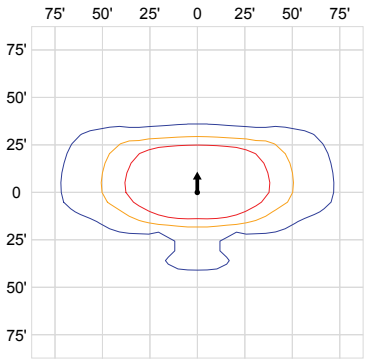

25’ Lens Height, Type III

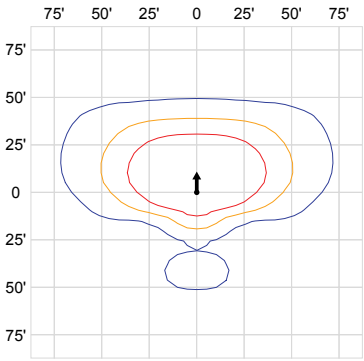

25’ Lens Height, Type IV

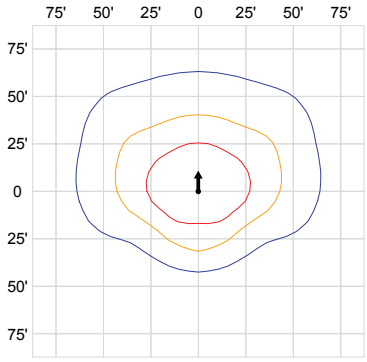

25’ Lens Height, Type V

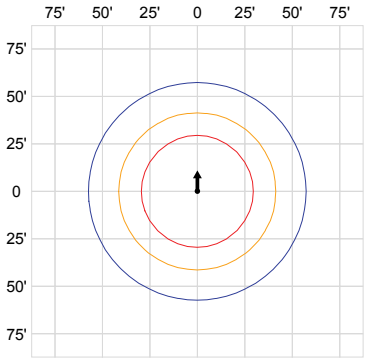

Moment

landscapeforms

Specification Sheet | DZ 100/200

200 Series - 30 LED SO CLR lens

10% max CD 50% max CD

Performance light engine @ 3000K

Spot Optic 20° (SP)

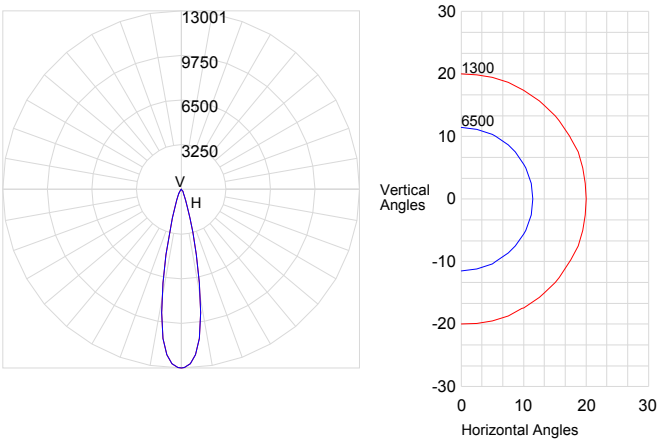

Medium 25° (ME)

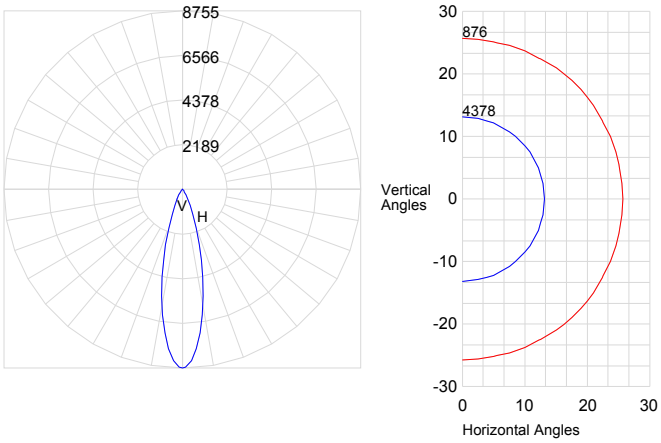

Flood 45° (FL)

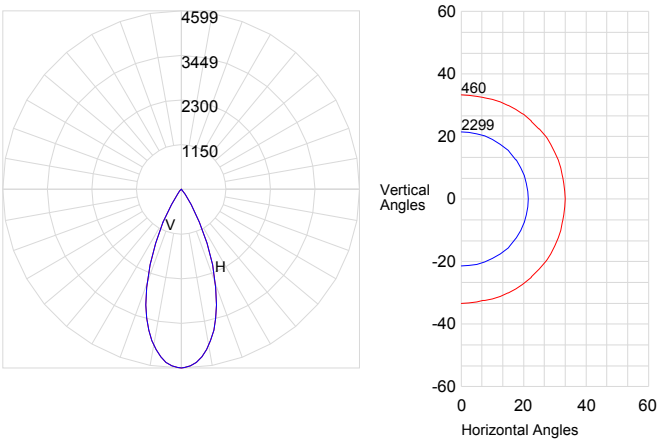

Wide Flood 75° (WF)

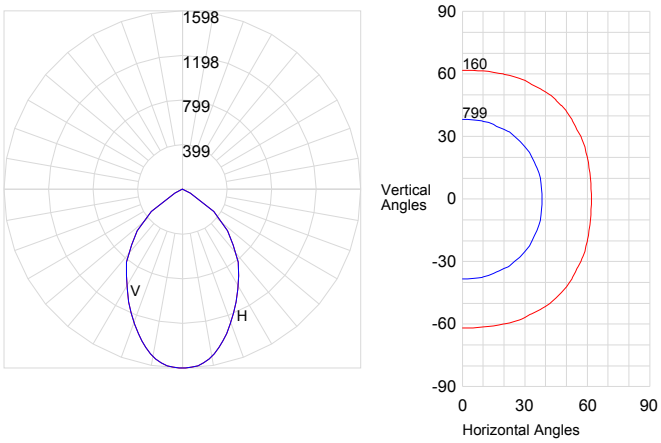

Moment

landscapeforms

Specification Sheet | DZ 100/200

200 Series - 30 LED HO CLR lens

10% max CD 50% max CD

Performance light engine @ 3000K

Spot Optic 20° (SP)

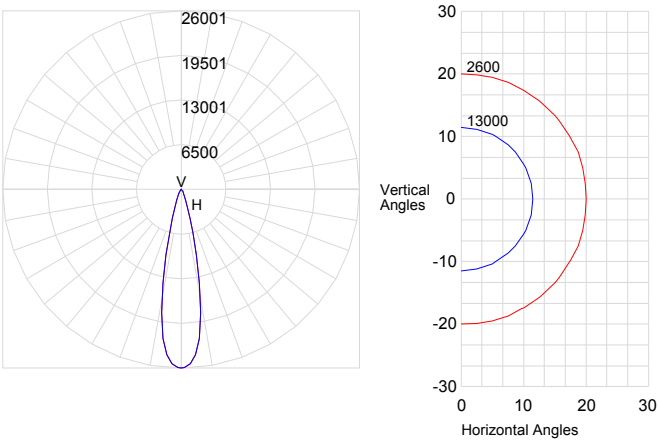

Medium 25° (ME)

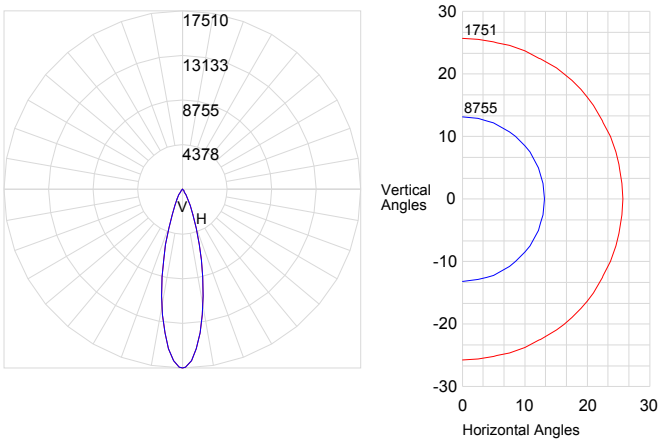

Flood 45° (FL)

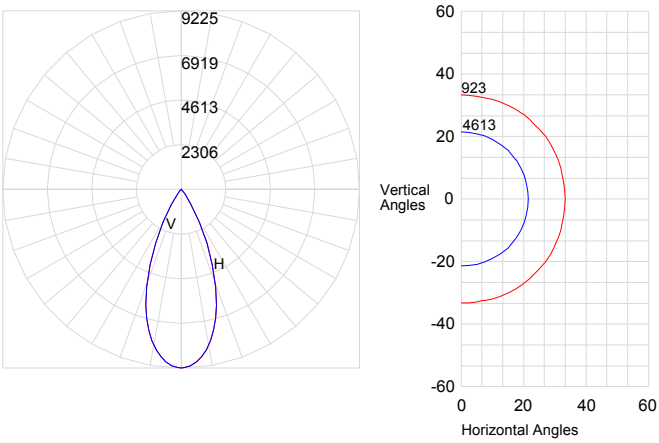

Wide Flood 75° (WF)

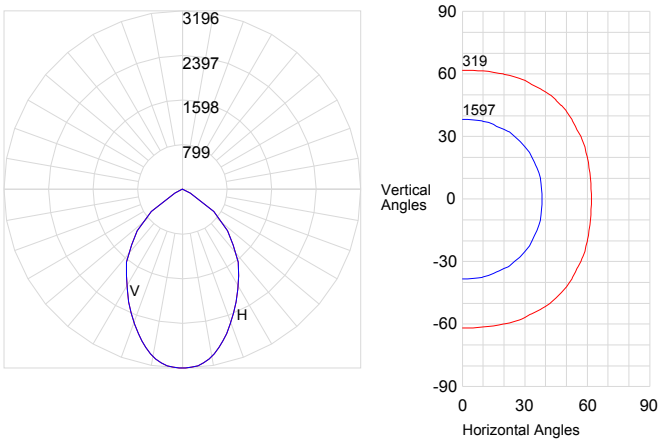

Moment

landscapeforms

Specification Sheet | DZ 100/200

200 Series - 50 LED SO CLR lens

10% max CD 50% max CD

Performance light engine @ 3000K

Spot Optic 20° (SP)

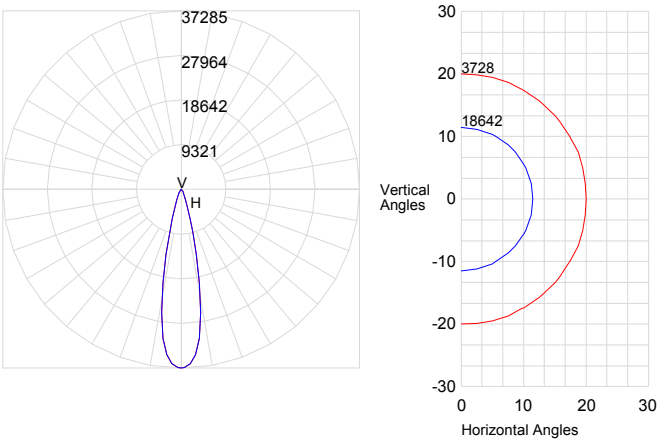

Medium 25° (ME)

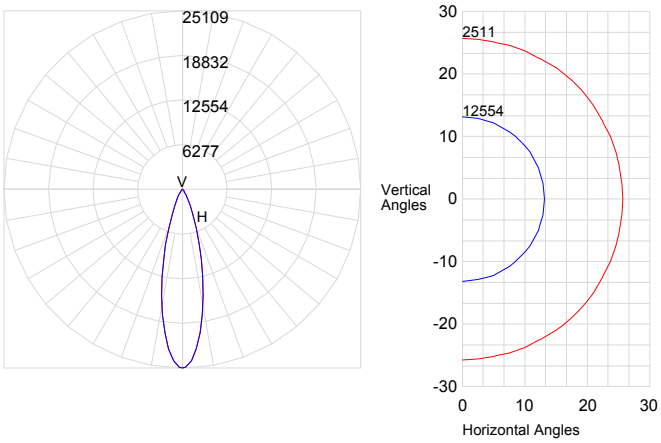

Flood 45° (FL)

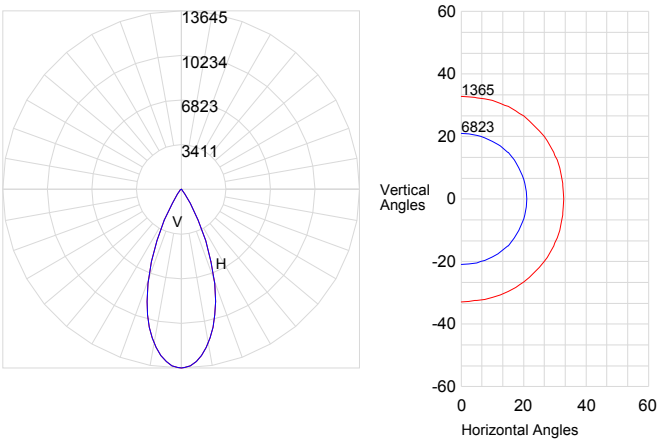

Wide Flood 75° (WF)

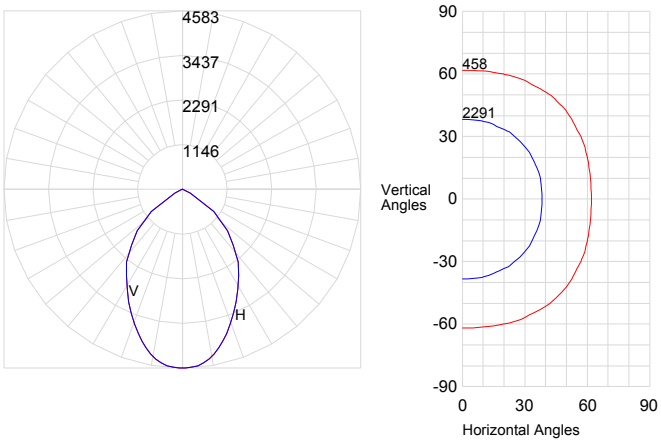

Moment

landscapeforms

Specification Sheet | DZ 100/200

200 Series - 50 LED HO CLR lens

10% max CD 50% max CD

Performance light engine @ 3000K

Spot Optic 20° (SP)

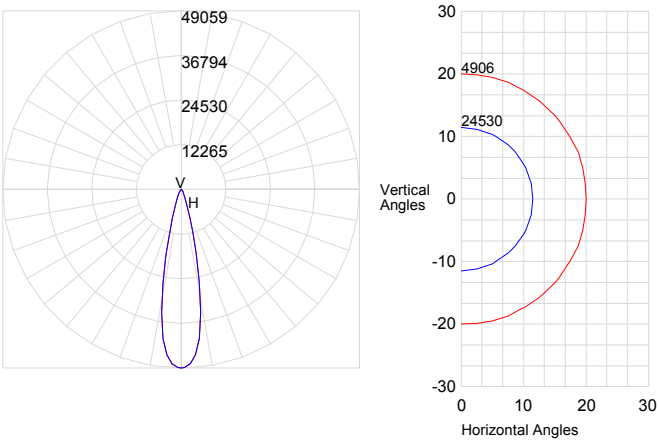

Medium 25° (ME)

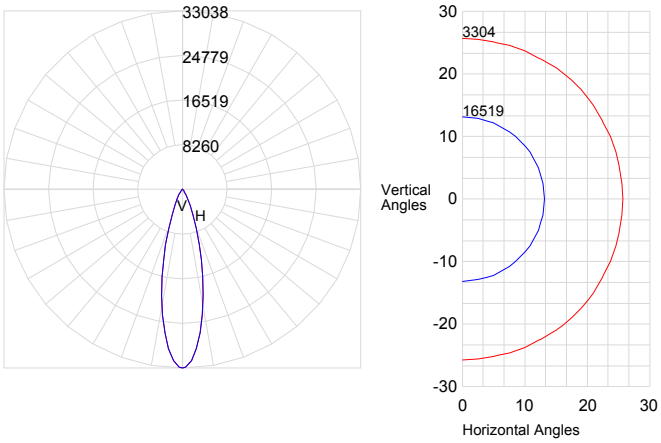

Flood 45° (FL)

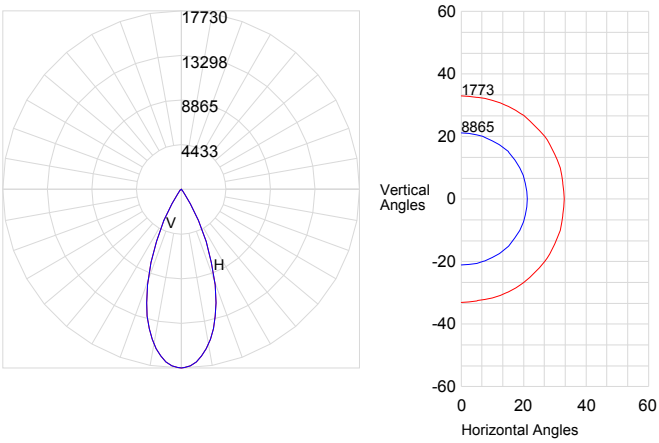

Wide Flood 75° (WF)

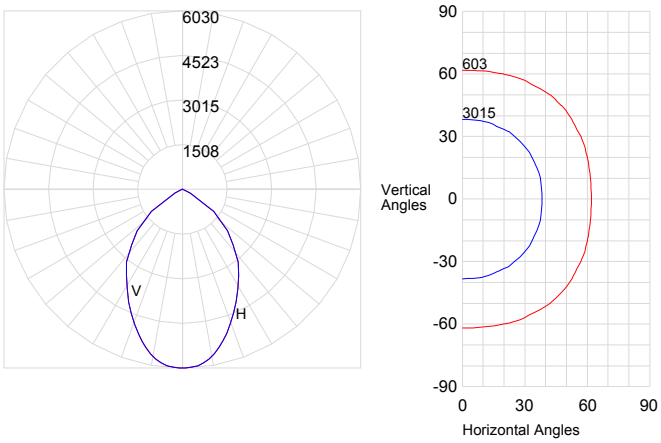

Moment

landscapeforms

Specification Sheet | DZ 100/200

Architectural Series - Powdercoated Metal* (Fine Texture)

FOG (Fog)
OBD (Obsidian)
MBK (Matte Black)
TER (Terra)
NMG (Nutmeg)
ONX (Onyx)
SAG (Sage)
BLA (Blue Ash)
DSK (Dusk)

Neutral Series - Powdercoated Metal*

SIL (Silver Metallic)
MER (Mercury Metallic)
STL (Steel Metallic)
BRZ (Bronze Metallic)
TNM (Titanium Metallic)
BLK (Gloss Black)
WHT (Gloss White)

Vivid Series - Powdercoated Metal* (Fine Texture)

CLY (Clay)
LMN (Lemon)
MNG (Mango)
CHL (Chili)
APR (Loll Apple Red)
LFG (Loll Leaf Green)
MSS (Moss)
FOR (Forest)
NVY (Loll Navy Blue)

Moment

landscapeforms

Specification Sheet | DZ 100/200

Powdercoated Metal

Powdercoated Metal Pangard II® Polyester Powdercoat is a hard, yet flexible, finish that resists rusting, chipping, peeling and fading. In addition to colors shown, a wide selection of optional and custom colors may be specified for an upcharge.

* All colors and patterns shown are approximate and may vary from sample and final.

Visit landscapeforms.com for more information.
Specifications are subject to change without notice.
©2025 Landscape Forms, Inc. Printed in U.S.A.

landscapeforms.com | *specify@landscapeforms.com*